Continuous positioning of the systems powered by McKibben type muscles

W. PARANDYK[1], M. LUDWICKI[2], B. ZAGRODNY[3], J. AWREJCEWICZ[4]

Key words: *McKibben type muscle, artificial muscles, positioning, continuous control, PID.*

1. Introduction

Introduced experimental investigation is dedicated to check the possibility of positioning pneumatic McKibben type actuators using only throttle valves and position feedback. We propose indirect control of the muscle position which is a resultant value of the valve position. The control is conducted on the compressed air flow ratio at the actuator inlet.

The flexible pneumatic actuators [1] (FPA) were developed to face the problem of the artificial muscles biocompatibility . First of all, a flexible structure of each actuator located in the FPA group is suitable for a various form of applications. Comparing to the classic linear, pneumatic cylinder in rigid housing, there is less physical limitations due to the mounting space. Focusing on the McKibben type artificial muscle, it is convenient for it to work in horizontal or vertical orientation or even to work when bent at 90 degrees. The universal configuration character and flexibility cause that described actuators are quite popular as an alternative drive solution for robotics (see [2]), automatic control systems and industry.

Because of a strong nonlinear character of artificial muscles connected with a rubber-type material properties and the friction occurrence between both the core and the braid, the displacement function of the actuator is dependent, inter alia on two variables – the pressure and the load. Due to mentioned difficulties and necessity of using various types of sensors, the most convenient way of the control (according to the authors) is a PID regulator (see the work [3]) with the displacement feedback usage (the control system scheme is presented on the Figure 2).

2. Experimental set-up

The experimental set-up consists of the McKibben type actuator connected to the handle, mounted on the rigid frame. The control hardware is National Instruments LabVIEW dedicated USB DAQ module. The indirect control of the actuator position is carried by the air flow ratio driven by throttle valves coupled with a stepper motors. The linear displacement sensor gives analog position feedback signal, measured by an analog input of the DAQ module. The regulator structure was developed as a part of the LabVIEW control program.

[1] Wiktor Parandyk, Lodz University of Technology, Department of Automation, Biomechanics and Mechatronics, 90-924, Lodz, Poland, e-mail: wiktor.parandyk@dokt.p.lodz.pl
[2] Michał Ludwicki, Lodz University of Technology, Department of Automation, Biomechanics and Mechatronics, 90-924, Lodz, Poland, e-mail: michal.ludwicki@p.lodz.pl
[3] Bartłomiej Zagrodny, Lodz University of Technology, Department of Automation, Biomechanics and Mechatronics, 90-924, Lodz, Poland, e-mail: bartlomiej.zagrodny@p.lodz.pl
[4] Jan Awrejcewicz, Lodz University of Technology, Department of Automation, Biomechanics and Mechatronics, 90-924, Lodz, Poland, e-mail: jan.awrejcewicz@p.lodz.pl

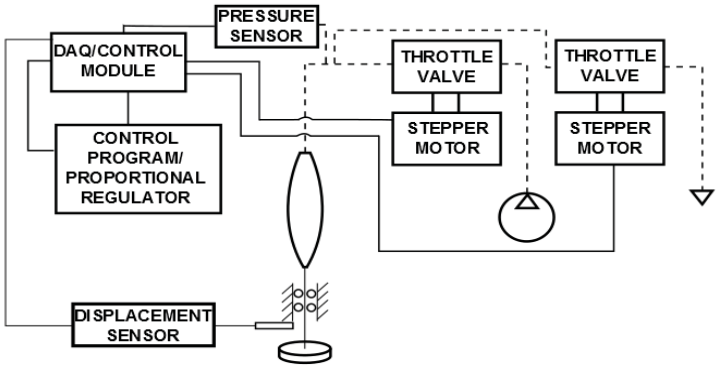

Fig. 1. The control system schematic structure.

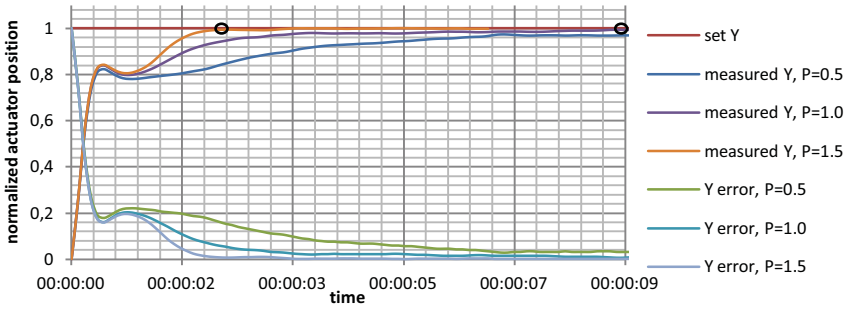

Fig. 2. Controlled position and control error vs. time for actuator with 5.0 kg load, measured for the experimental set-up arrangement.

3. Summary

In presented work, attempt of PID control algorithm of pneumatic McKibben type actuators was developed and discussed. It is an extension of some earlier work [4], where only the manual on-off control was used. It is possible to automatically manipulate the air valves opening level, only measuring the actual length, setting final position of the actuator.

References:

[1] F. DAERDEN, D. LEFEBER, *Pneumatic Artificial Muscles: actuators for robotics and automation*, Vrije Universiteit Brussel, Department of Mechanical Engineering, Brussels.

[2] B. TONDU S. IPPOLITO J. GUIOCHET, *A Seven-degrees-of- freedom Robot-arm Driven by Pneumatic Artificial Muscles for Humanoid Robots,* Institut National de Sciences Appliquées,Touluse 2005, 257-274.

[3] Y. LI, K. HEONG ANG, G.C.Y. CHONG, *PID control system analysis and design,* Control Systems, IEEE Vol. 26, Issue 1, 32 – 41. (2006)

[4] W. PARANDYK, B. ZAGRODNY, J. AWREJCEWICZ, *Selected problems of biocompatibility of the pneumatically controlled arm*, PAR, No 1, 71-75 (2013)